FIAC SpA - via Vizzano, 23 - 40037 Pontecchio Marconi (Bo) - Italy - fiac@fiac.it

AB 598

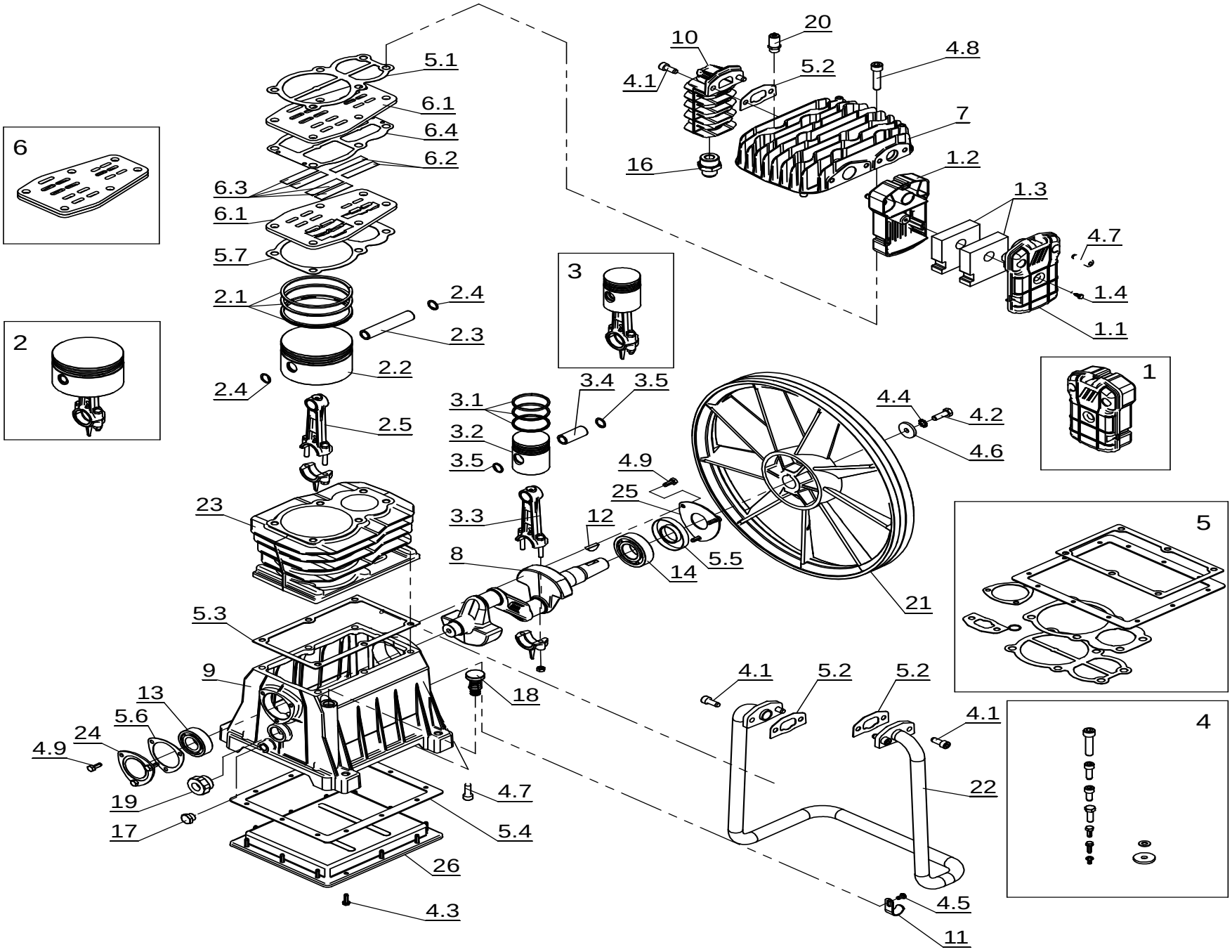

www.fiac.it - all rights reserved

AB 598

validity date - from 22/10/2014

Ref.	Code	Description	Quantity
1	1124080029	Intake filter kit	1
2	1124080085	LP Conn.rod/Piston Kit	1
3	1124080086	HP conn.rod/piston kit	1
4	1124080092	Screw kit	1
5	1124080228	Gasket kit	1
6	1124230123	Valve plate Kit	1
7	1125030001	Head	1
8	1125040149	Crankshaft	1
9	1125070001	Crankcase	1
10	1125130004	Aftercooler	1
11	1127040305	Clamp	1
12	1127050152	Key	1
13	0502210500	Bearing	1
14	0502210600	Bearing	1
15	1127070011	O-ring	1
16	1127080119	Joint	1
17	1127090009	Plug	1
18	1129701377	Brent cover	1
19	1127180006	Oil level gauge	1
20	1127190235	Safety valve	1
21	1127200105	Flywheel	1
22	1127230222	Aftercooler	1
23	1127570546	Cilynder	1
24	1127650007	Support	1
25	1127650008	Support	1
26	1127650009	Lower cover	1
1,3	1127210069	Filering element	2
2,1	1124080084	Low pression ring kit	1
2,2	1127220034	Piston	1
2,3	1127050027	Piston pin	1
3,1	1124080008	Piston rings kit	1
3,2	1127220012	Piston	1
3,3	1125050058	Con rod	1
3,4	1127050013	Piston pin	1

www.fiac.it - all rights reserved